Circuits, Systems, and Signal Processing (2022) 41:6098–6112
https://doi.org/10.1007/s00034-022-02062-y

One-Shot Retail Product Identification Based on Improved Siamese Neural Networks

Chunchieh Wang[1] · Chengwei Huang[2] · Xiaoming Zhu[2] · Liye Zhao[1]

Received: 16 November 2021 / Revised: 11 May 2022 / Accepted: 13 May 2022 /
Published online: 10 June 2022
© The Author(s), under exclusive licence to Springer Science+Business Media, LLC, part of Springer Nature 2022

Abstract
Conventional retail stores are undergoing digital transformation, and in a typical smart retail store, automatic recognition of retail products is essential for customer experience in the checkout stage. In this paper, we propose an improved Siamese neural network to identify the product from one-shot learning. First, a spatial channel dual attention mechanism is proposed to improve the network architecture. Second, a binary cross-entropy loss function with a distance penalty is adopted to replace the conventional contrastive loss function. The proposed network can better model the details of the products. The experimental results are achieved on two public available databases. The results show that the proposed method outperforms the conventional methods, and it can solve the data insufficient problem in the training stage. Smart retail stores can change the SKUs (Stock Keeping Units) conveniently without collecting a large amount of training samples.

Keywords Retail product recognition · Siamese neural network · Attention mechanisms · One-shot learning

Chunchieh Wang and Chengwei Huang are co-first author.

✉ Liye Zhao
liyezhao@seu.edu.cn

Chunchieh Wang
chunchiehwang@seu.edu.cn

Chengwei Huang
huangchengwei@zhejianglab.com

Xiaoming Zhu
zhuxiaoming@zhejianglab.com

1 School of Instrument Science and Engineering, Southeast University, Nanjing 210096, China

2 Zhejiang Lab, Hangzhou, China

1 Introduction

Retail is a labor-intensive industry, and labor costs account for a high proportion of most retail stores. In the process of digital transformation, smart retail stores tend to reduce costs by automatic recognition of retail products. On the one hand, product recognition can identify which products are missing from the shelves to remind the store staff to replenish the product immediately, and on the other hand, product identification can be applied to the automatic checkout system to improve the user experience. Computer vision plays a key role in this process.

In the past decade, deep neural networks have been widely used in computer vision research. Table 1 summarizes related works on retail product recognition using neural networks. Geng et al. [7] used VGG-16 as the backbone network to identify retail products, to achieve the identification of 857 categories of food. In their work, VGG-16 is integrated with recurring features and attention maps to improve retail product identification performance in real-world scenarios. Various neural network models were studied and compared for retail product recognition [25, 27], including popular CNN models, VGG-16 [22], ResNet [9], and Inception [23]. Goldman and Goldberger [8] used AlexNet to learn the visual representation of a retail product. CRF (conditional random field) was used in the model, and a large number of products were identified.

The recent research interests have been shifted to identifying a very large amount of retail products, which requires large-sclare retail databases [13, 26]. Karlinsky et al. [13] used VGG as the backbone network for feature learning. MAC was introduced for global image embedding. They classified 3288 different categories of food with a recall rate of 57.07 percent and an accuracy of 36.02 percent.

Researchers have proposed different models for one-shot image recognition, which relies on metric learning. Koch et al. [14] proposed SiameseNet in 2015; SiameseNet used the identical twin network structure for metric learning. Vinyals et al. [28] proposed MathNet in 2017; MatchNet trained an end-to-end network similar to the nearest neighbor classifier. Learn the representation of the targets. Cai et al. [2] proposed Memory Matching Networks(MM-Net), in 2018. In MM-Net, they designed a contextual learner to predict CNN's parameters to embed unlabeled images based on the contextual information between target categories. As can be seen, Siamese neural networks and metric learning are a common algorithm for solving one-shot image recognition problems [4], and moreover, such structures can also be used for similarity and change detection in images [19, 24, 29].

Although the neural network model has achieved excellent results in most retail product identification tasks, it still faces challenges such as a wide variety of SKUs, insufficient training samples, view point changes, and the increase in SKU categories.

Conventional approaches relied on large-scale training data in the supervised stage. However, the data requirements are hard to meet since the number of SKUs often change frequently in retail scenarios. It is hard to prepare enough samples for each product class.

Therefore, in this paper, an improved Siamese neural network model is proposed to perform one-shot retail product identification tasks, that is, for each item to be identified only one image is used for training. It is more suitable for most of the actual retail scenarios. By building sample pairs, we increase the size of the training

Table 1 Summary of retail product recognition using neural networks

Network models	Related works
Inception	Tonioni et al. [25], Chong et al. [3]
GoogLeNet	Farren et al. [6]
AlexNet	Karlinsky et al. [13], Farren et al. [6], Li et al. [16], Goldman et al. [8]
VGG	Biasio et al. [5], Tonioni et al. [25], Tonioni et al. [26], Karlinsky et al. [13]
CaffeNet	Farren et al. [6], Li et al. [16], Jund et al. [12]
ResNet	Geng et al. [7], Tonioni et al. [25], Melek et al. [20], Liu et al. [17]

set. We improve the feature extraction with dual attention mechanism and improve the binary cross-entropy loss function with Euclidean penalty function. The proposed model can also be used as an effective solution to the challenge of increasing the SKU categories.

The main contributions of our paper are: (i) Considering the challenge of retail product identification in the actual scenarios, only one sample image is used for training. The data set is enhanced and expanded by using sample pairs. The unseen objects are also supported in our network. (ii) The dual attention mechanism is introduced at the end of the Siamese network structure. The learning ability of local features and visual details is improved, relying on the spatial attention mechanism and channel attention mechanism. The discriminant ability between classes is also improved. (iii) The loss function commonly used in Siamese network model is improved, and the Euclidean distance is introduced to the cross-entropy loss function for training. This avoids the imbalance of penalty degree for error samples and reduces the performance loss caused by manual settings.

In Sect. 2, we focus on the methods proposed in this paper, in particular the Siamese network structure, the dual attention mechanism, and a novel loss function. In Sect. 3, we perform several experiments on two retail product datasets to validate the effectiveness and advancement of the proposed method. Section 4 summarizes the paper and give citation statements for the datasets, respectively.

2 Methodology

In the smart retail scenario, SKUs often changes. We propose to use only one image for each SKU as training sample. Conventionally, using only one sample of each class to train a Softmax classifier neural network with cross-entropy loss, the network will be seriously overfitted. This is largely due to the fact that the fully connected layer at the end of the traditional neural network model explodes with the number of classifications, while a large number of network parameters cannot be learned by insufficient training samples. In our approach, we use a Siamese network structure and metric loss instead of the fully connected layer and replace it with, and increase the size of the training sample through constructing image pairs.

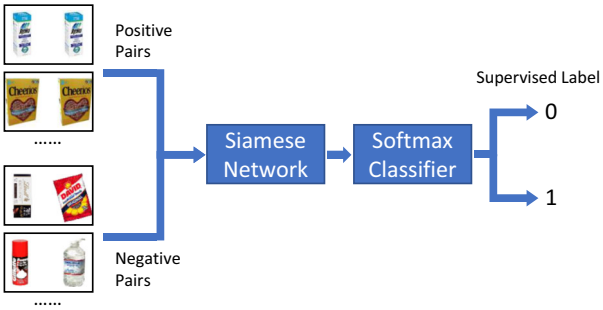

Fig. 1 Siamese network-based training for retail products identification

2.1 Siamese Network Model and Sample Pairs Generation

Let x_1 and x_2 denote two retail images, $x_1 \circ x_2$ indicates that x_1 and x_2 are the same SKU, and we have $p(x_1 \circ x_2) = p(x_2 \circ x_1)$

We can take advantage of this symmetry to send two inputs to two networks that share exactly the same parameters to extract feature representations. By constructing the Siamese network [1], we can measure the differences between the two inputs. As shown in Fig. 1, we take two images (a pair of retail products) as the input. The images from the same product or different products correspond to the positive class or the negative class, respectively. Therefore, the network differs from traditional image classification models in that it does not directly classify images into a category, but only discriminates between positive and negative sample pairs, and is in fact a binary classification network that performs metric learning.

The advantage of this is that even if there is only one training image for each SKU category, it is possible to build a large number of sample pairs for training through data augmentation; on the other hand, our model is obtained through metric learning, so for an "unseen" SKU category, as long as one of the images is first placed in our sample library, the model will be able to determine whether other images are of this SKU or not by metrics, even without retraining the model (this is very similar to the general practice of face recognition).

As shown in Fig. 2, the feature extraction module of the Siamese network consists of two identical neural networks. Each takes x_1 and x_2 as the inputs, containing 17 convolution layers referring to the hyperparameters of ResNet18 [9]. The first layer contains 64 convolutional kernels, and the kernel size is 7×7, step is 2. The input image is down-sampled by 0.5 times. The channel number is increased up to 64 dimensions. The max-pooling layer takes 3×3 window size, and the step is 2. Feature map is down-sampled by 0.5 times through the max-pooling layer.

The rest of the convolutional layers consists of 8 residual modules. Each module consists of two convolutional layers connected by the shortcut path [9]. The convolutional kernel size is 3×3. The step is 2 for the first layer and 1 for the other. The convolutional kernel increases as the network goes deeper. The final feature map is 1/32 of the input image and the channel number is 512 dimensions, denoted as: $\mathbf{F}_1$ and $\mathbf{F}_2$.

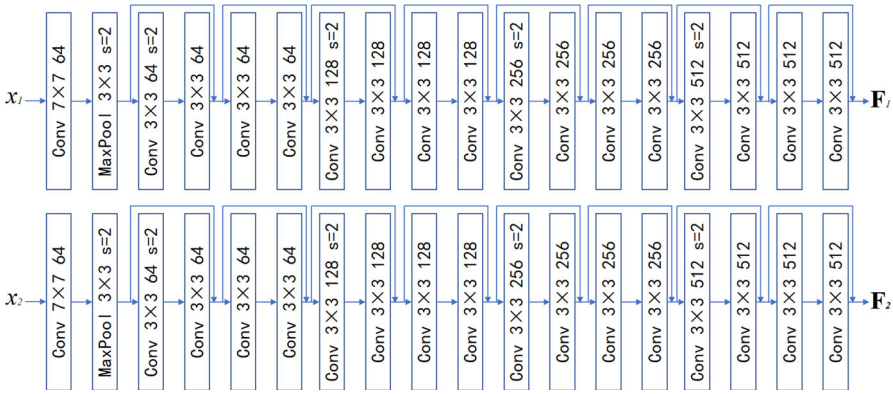

Fig. 2 Siamese network structure

Fig. 3 Dataset augmentation for pair-wise training

Assuming that there is a total of E retail products to be identified, the original training set contains E product images, and we combine each image with all E images to generate sample pairs; then, the number of sample pairs is $\sum_{i=1}^{E}$. This includes E pairs of identical samples and $\sum_{i=1}^{E-1}$ pairs of different samples. We use data augmentation to enlarge the identical sample pairs. The number of total sample pairs is: $N_{\text{pairs}} = 2\sum_{i=1}^{E-1}$.

If we only copy the identical sample pairs, we will have poor training performance of the neural network. The augmentation techniques include: random scaling of edge lengths to 0.9∼1.1 times, random rotation and perspective transformation in horizontal and vertical directions of $-30° \sim 30°$, and random increase and decrease in brightness, saturation and contrast by 10%. This way the identical sample pairs remain certain degree of difference. The process pipeline for the enhanced module is shown in Fig. 3.

This means that we can build a fairly large training set using only one training image from each category. The size of the training set increases with the size of the SKUs.

At this point, we have built enough training data to train Siamese network consisting of two identical convolutional networks, encoding two retail product images x_1 and x_2 to high-dimensional feature maps $\mathbf{F}_1$ and $\mathbf{F}_2$.

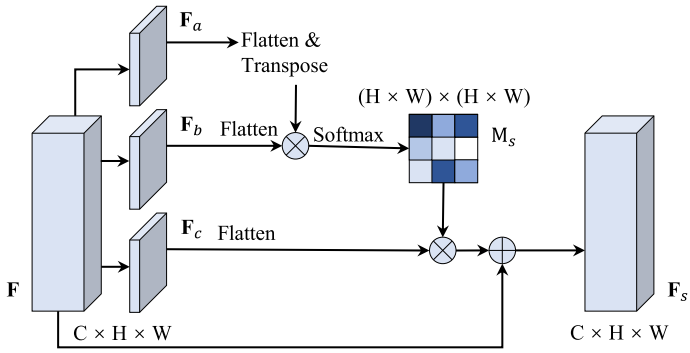

Fig. 4 Spatial attention mechanism

In Sects. 2.2 and 2.3, we will introduce the attention mechanism and the modified binary cross-entropy loss functions with distance penalty terms to improve the ability of retail products recognition.

2.2 Space Channel Dual Attention Mechanism

In comparison of conventional image recognition task, retail product images have more subtle changes between different targets. This requires better feature representation learning.

Research [18, 32] has shown that feature extraction may leads to error results, only relying on the conventional network. Therefore, we introduce the dual attention mechanism. For high-dimensional feature map produced by Siamese network, connections between local features may lead to better representation of the visual details of SKU, which contribute to the clustering of similar visual objects and better distinguish differences.

The spatial attention mechanism is shown in Fig. 4.

For the high-dimensional feature map $\mathbf{F} \in R^{C\times H\times W}$, extracted by Siamese network in Sect. 2.1, H, W, C denote the height, width, and channel number.

Send the feature map to three convolutional layers with size of 1×1, to achieve three new feature maps: $\mathbf{F}_a$, $\mathbf{F}_b$, and $\mathbf{F}_c$. Flatten their width and height dimensions: $\{\mathbf{F}_a, \mathbf{F}_b, \mathbf{F}_c\} \in R^{C\times H\times W}$, then, we take the transpose of $\mathbf{F}_a$, multiply by $\mathbf{F}_b$, and send the result to Softmax function to get spatial attention matrix: $\mathbf{M}_s \in R^{(H\times W)\times(H\times W)}$.

$$\mathbf{M}_s^{i,j} = \frac{\exp(\mathbf{F}_a^{iT} \cdot \mathbf{F}_b^j)}{\sum_{i=1}^{(H\times W)} \exp(\mathbf{F}_a^{iT} \cdot \mathbf{F}_b^j)} \tag{1}$$

$\mathbf{M}_s^{i,j}$ denotes the relation between i-th and j-th feature pixels. Multiply $\mathbf{F}_c$ by $\mathbf{M}_s$, and add the result to original feature $\mathbf{F} \in R^{C\times H\times W}$ to get output feature $\mathbf{F}_s$:

$$\mathbf{F}_s^j = \eta \sum_{i=1}^{N} (\mathbf{M}_s^{i,j} \mathbf{F}_c^j) + \mathbf{F}_j \tag{2}$$

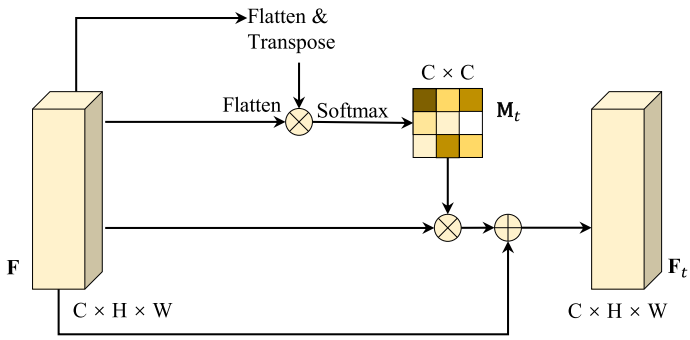

Fig. 5 Channel attention mechanism

where η is the trainable scale factor, with initial value of zero. It avoids the overflow of $\mathbf{M}_s^{i,j}$. Feature map $\mathbf{F}_s$ from each location is the additive result of the original feature and the features from all locations. Based on the spatial attention, features can be merged selectively to reduce the within class variance and to improve the between class separation.

Similarly, channel attention mechanism is responsible for capturing the details in channel dimension. Different from spatial attention, high-dimensional feature map $\mathbf{F} \in R^{C\times H\times W}$ does not need to be processed by 1×1 convolutional layers. Instead, it is directly flattened in the width and the height dimensions. The channel attention matrix $\mathbf{M}_t \in R^{C\times C}$ is achieved after the feature map is multiplied by its own transpose matrix. $\mathbf{M}_t^{i,j}$ denotes the relation of feature maps from the i-th and the j-th channel. Multiply $\mathbf{F}$ by $\mathbf{M}_t$, and add the results to its own. The output feature $\mathbf{F}_t$ is achieved, as shown in Fig. 5.

Therefore, the final feature map of each channel is the sum of the original feature with the features from all channels. It enhanced the ability to model the details of retail products.

For the two output feature map from Siamese network, $\mathbf{F}_1, \mathbf{F}_2 \in R^{C\times H\times W}$, we apply the dual attention mechanism, and get $\mathbf{F}_s$ and $\mathbf{F}_t$, respectively. Stacking over the channel dimension, we have better feature representation: $\mathbf{F}'_1, \mathbf{F}'_2 \in R^{2\times C\times H\times W}$.

2.3 Euclidean Cross-Entropy Loss Function

Siamese network belongs to the metric learning family, and Contrastive Loss function [10] is often used in Siamese network training.

$$\text{Contrastive Loss} = -\frac{1}{N}\sum_{i=1}^{N} y_i \frac{1}{2}(\max(0, m - d_i))^2 + (1 - y_i)\frac{1}{2}d_i^2 \tag{3}$$

where y_i is 0 or 1, denoting samples belonged to the same SKU or not. d_i is the Euclidean distance of the outputs from two networks in the Siamese network. $m > 0$ is the marginal boundary, and the samples above this threshold will not contribute to

the loss. Optimization of Contrastive Loss function minimizes the sample distances among the same classes and maximizes the distances among different classes.

This loss function somewhat causes unbalanced penalty in the error samples, especially for the augmented samples, which often bring a certain level of differences and yield nonzero measurement. On the other hand, the samples from different categories may not contribute to the penalty function unless the marginal threshold is met.

In order to better reflect the subtle changes in the retail products, we can model the product identification problem as a binary classification. The binary cross-entropy loss function is introduced:

$$\text{BCE Loss} = -\frac{1}{N}\sum_{i=1}^{N} y_i \ln(a_i) + (1 - y_i)\ln(1 - a_i) \tag{4}$$

where y_i is a binary label, 0 stands for the same category, and 1 stands for different categories. a_i is the output of the network.

In our model, the Siamese network uses dual attention mechanism to produce a pair of feature maps: $\mathbf{F}'_1, \mathbf{F}'_2 \in R^{2\times C\times H\times W}$. Through global average pooling, we have a pair of feature vectors (1024 dimensions): $\mathbf{f}_1, \mathbf{f}_2 \in R^{(2\times C)}$. Compute the Euclidean distance between $\mathbf{f}_1$ and $\mathbf{f}_2$ and map into the range [0, 1] by Sigmoid function. We have the final output:

$$A = \frac{1}{1 + \exp(-\sqrt{\text{sum}_p(\mathbf{f}_1^p - \mathbf{f}_2^p)^2})} \tag{5}$$

The Euclidean cross-entropy function is defined as:

$$\begin{aligned}\text{EDCE Loss} = -\frac{1}{N}\sum_{i=1}^{N} y_i \ln\left(\frac{1}{1 + \exp(-\sqrt{\sum(\mathbf{f}_1^i - \mathbf{f}_2^i)^2})}\right) \\ + (1 - y_i)\ln\left(\frac{-\exp(-\sqrt{\sum(\mathbf{f}_1^i - \mathbf{f}_2^i)^2}}{1 + \exp(-\sqrt{\sum(\mathbf{f}_1^i - \mathbf{f}_2^i)^2}}\right)\end{aligned} \tag{6}$$

The L2 distance between $\mathbf{f}_1$ and $\mathbf{f}_2$ reflects the similarity of two products. The training based on the sample pairs also brings the metric learning ability. In the online prediction stage, we only need to pair the input image with each of the sample image from the SKU categories. The lowest loss value indicates the identified result.

With enough training pairs, the trained model has ability of identifying new SKUs, only requiring a simple expansion of the gallery images. In Sect. 3, we will verify our model on two public available databases.

(a) Examples from GroZi-120 dataset

(b) Examples from RPC dataset

Fig. 6 Example images from RPC database and GroZi-120 database

3 Experimental Results

3.1 Experiment Settings

In this section, we verify the proposed network with large-scale retail product identification experiments. Two widely used public available databases are used.

The GroZi-120 database from University of California [21] and the RPC database from Megvii Technology [30].

GroZi-120 contains 120 products, the data includes two sets, "in Situ" and "in Vitro." The "in Situ" set is collected from actual scenario from grocery retail store. A total of 11194 images were captured by surveillance cameras on shelf. The "in Vitro" set is collected from online images, which includes 676 images. In this experiment, we use the "in Situ" set for training and identification, as shown in Fig. 6a.

RPC database contains 200 SKUs and 17 gross categories. The database includes two types, "Checkout Image" (30,000 images) and "Exemplar Image" (53739 images).

The checkout image simulates more than one category of products stacked on the cash register. They are mainly used for researchers to study the detection or object counting tasks. Exemplar images are taken in a lab environment and contain only a single product. In our experiment, we use the exemplar images for training and identification, as shown in Fig. 6b.

For performance evaluation, we randomly select an image for training in each category. All remaining images are used for identification. We use the popular Top-1 accuracy, Top-5 accuracy, and F1 scores to evaluate the performance of our retail product identification methods. The Top-1 accuracy is the accuracy of the first category match with the actual target; Top-5 accuracy is the accuracy of the top five categories that contain the actual target.

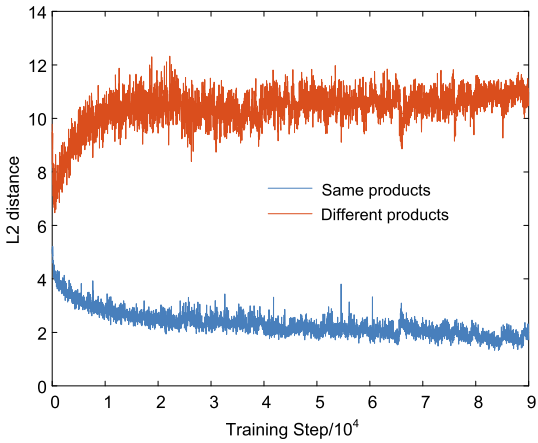

Fig. 7 L2 distances of the same and different products pairs during network training

The F1 score is defined as follows:

$$\mathrm{F_1\ Score} = \frac{1}{N}\sum \frac{2\mathrm{TP}^2}{2\mathrm{TP} + \mathrm{FP} + \mathrm{FN}} \tag{7}$$

TP, FP, TN, and FN stand for true positive, false positive, true negative, and false negative. N is the number of SKUs to be identified. During the network training process, we use the Adam(adaptive moment estimation) algorithm [15]. The learning rate of each parameter is dynamically adjusted by using the first-order and second-order moment estimates of the gradient, wherein the weight attenuation of the Adam(adaptive moment estimation) algorithm is set to $5e^{-5}$, batch size is 32, the initial learning rate is $4e^{-3}$, maximum iteration number is set to 200.

3.2 Results and Discussion

In order to verify the improvement in recognition results by the proposed Siamese network model used in this paper, we conducted experiments on the GroZi-120 and RPC databases. We compared various network architectures in retail product identification: the single-channel feature extraction + cross-entropy loss, the Siamese network + contrastive loss, the dual attention Siamese network + contrastive loss, and the dual attention Siamese network + Euclidean contrastive loss.

During the network training, we use Adam [15] for parameter optimization and the learning rate is dynamically adjusted. The weight decay is set to $5e^{-5}$. Batch size is set to 32. The initial learning rate is set to $4e^{-3}$. The learning rate decreased by 1/2 after 40 epochs, and the total epoch number is limited to 200. The L2 distance of the same products pairs decreases, while the L2 distance of different products pairs increases during the training process. After 80K training steps, the model starts to converge, as shown in Fig. 7.

From Tables 2 and 3, we can see that the introduction of dual attention mechanism and European distance cross entropy loss can improve the accuracy considerably.

Table 2 Comparison of performances of various Siamese network architectures on GroZi-120 Dataset

Network architecture	Loss function	Top-1 accuracy (%)	Top-5 accuracy (%)	F1 score
Single convolution network	Cross-entropy	11.56	40.24	0.1212
Siamese convolution network	Contrastive loss	54.98	89.77	0.5594
Siamese + dual-attention	Contrastive loss	60.29	93.45	0.5921
Siamese + dual-attention	Euclidean cross-entropy	65.30	95.32	0.6452

Table 3 Comparison of performances of various Siamese network architectures on RPC Dataset

Network architecture	Loss function	Top-1 accuracy (%)	Top-5 accuracy (%)	F1 score
Single convolution network	Cross-entropy	8.34	42.37	0.0892
Siamese convolution network	Contrastive loss	49.34	86.34	0.4826
Siamese + dual-attention	Contrastive loss	57.55	93.56	0.5712
Siamese + dual-attention	Euclidean cross-entropy	66.25	96.19	0.6403

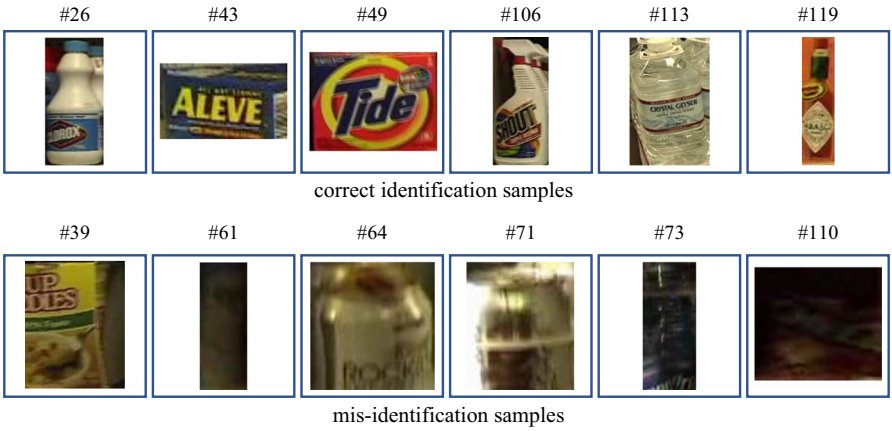

Fig. 8 Visualization of the recognition results with the Grozi-120 as an example

Siamese network plays a key role in improving the accuracy of retail product identification. By building sample pairs, the scale of training set can be expanded to effectively train neural network models. Our model achieved Top-5 accuracy of 95.32% and 91.47%, respectively, on both databases.

In Fig. 8, we visualize the recognition results of the model on Grozi-120, showing 6 randomly selected images from correct identification (average recognition rate $> 95\%$ in the validation set) and mis-identification (average recognition rate $< 10\%$ in the validation set) samples, respectively, in which we can find that the samples with high recognition rates all have a clear and easily distinguishable image appearance, whereas the samples that cannot be correctly identified are either quite blurred themselves or are very easily confused with images of other products (such as #64 and #71), which has a significant impact on the one-shot recognition task.

Table 4 Top-1 Accuracy for Identifying unseen SKUs

Dataset	One-fold (%)	Two-fold (%)	Three-fold (%)	Four-fold (%)	Five-fold (%)	Ave. (%)
GroZi-20	71.19	69.82	69.71	70.03	72.58	70.67
RPC	72.23	75.87	74.23	76.47	72.98	74.36

Table 5 Comparing various neural network models on GroZi-120 dataset

Model	Top-1 accuracy (%)	Top-5 accuracy (%)	F1 score	Time cost/ms
Conventional SiameseNet	54.52	86.22	0.5348	3.76
MatchNet	53.87	84.79	0.5224	4.44
MM-Net	62.19	94.35	0.6119	6.76
SENet	61.31	93.89	0.6108	7.13
CBAM	62.29	94.51	0.6227	7.75
Proposed model	65.30	95.32	0.6452	7.97

Facing the challenge of frequent changes in SKUs in the actual retail scenarios, we evaluate the model's generalization ability on "unseen" products. From GroZi-120 with 120 categories of products and RPC containing 200 categories of products, we apply five-fold cross-validation. Each time, 80% of the SKUs are used for training, and 20% of the remaining "unseen" SKUs are used for identification.

According to Table 4, results show that even for SKUs that are not involved in model training, our model can still identify "unseen" products by measuring the difference between the test image and template image. This is especially suitable for adding new SKUs to the existing retail inventory, without retaining the whole model.

Siamese network has metric learning ability. The more SKUs involved in the training stage, the bigger the training set grows. The metric learning result will also be improved. In our network architecture, the image classification problem is converted to the metric learning task. Therefore, the generalization ability on unseen samples is improved.

We reproduced three previous works, MatchNet, MM-Net, and SiameseNet and replace the attention module in our network with SENet [11]/CBAM [31], to compare with our model on the same GroZi-120 and RPC datasets. As shown in Tables 5 and 6, our model modified the network attention modules and the loss function to achieve better performance in both Grozi-120 and RPC.

MatchNet trains an end-to-end network similar to the nearest neighbor classifier. Learn the representation of the targets. MM-Net adopted a contextual learner to predict CNN's parameters to embed unlabeled images based on the contextual information between target categories. SiameseNet is similar to our model, using the identical twin network structure for metric learning. Both SENet and CBAM are classical attention structures, where SENet performs attention in the channel dimension, while CBAM, which is very similar to our dual attention mechanism, performs attention in both the channel and spatial dimensions. In contrast, our attention mechanism module has a different structure and achieves better results.

Table 6 Comparing various neural network models on RPC dataset

Model	Top-1 accuracy (%)	Top-5 accuracy (%)	F1 score	Time cost/ms
Conventional SiameseNet	49.89	84.63	0.4794	3.76
MatchNet	56.21	85.36	0.5279	4.44
MM-Net	63.72	94.58	0.6285	6.76
SENet	63.11	94.29	0.6298	7.13
CBAM	63.75	95.61	0.6357	7.75
Proposed model	66.25	96.19	0.6403	7.97

In addition, we also compared the time cost of each of the above models for inference with NVIDIA RTX 2080TI (Average value obtained from 1000 runs). Due to the deeper network structure of our model, it does not offer a significant efficiency advantage over earlier models, but nonetheless, the millisecond-level inference speed is perfectly acceptable. For the dual attention mechanism module, it does not add too much parameters and therefore improves performance only with a small increase in time cost compared to other attention structures.

4 Conclusions

In this paper, we propose an improved Siamese network model for one-shot retail product identification. We expand the training pairs by data augmentation techniques. Compared with conventional Siamese network, we modified the cross-entropy loss function with Euclidean distance and applied dual attention mechanism, in order to improve the modeling ability for target details.

Based on two public available databases, we verified the effectiveness of our proposed network. In addition, due to the metric learning ability, we can add new SKUs to the model without retaining, which is practical in actual retail shop.

In future work, we will focus on combining the detection stage and the recognition stage of retail products in complex environment.

Data Availability Statement The data sets related to this work are public available from two public databases: RPC Database and GroZi-120 Database.

Declarations

Conflict of interest The authors declare that there are no competing interests related to this work.

References

1. J. Bromley, J.W. Bentz, L. Bottou et al., Signature verification using a “siamese” time delay neural network. Int. J. Pattern Recogn. Artif. Intell. **7**(04), 669–688 (1993)
2. Q. Cai, Y. Pan, T. Yao, C. Yan, T. Mei, Memory matching networks for one-shot image recognition, in *2018 IEEE/CVF Conference on Computer Vision and Pattern Recognition* (2018), pp. 4080–4088

3. T. Chong, I. Bustan, M. Wee, Deep learning approach to planogram compliance in retail stores, Semant. Scholar 1–6 (2016)
4. D. Chicco, Siamese neural networks: an overview. Artif. Neural Netw. **2190**, 73–94 (2021)
5. A. De Biasio, Retail shelf analytics through image processing and deep learning, Master Thesis, Department of Information Engineering, University of Padua, Italy (2019)
6. D. Farren, Classifying food items by image using Convolutional Neural Networks, report, Stanford University (2017)
7. W. Geng, F. Han, J. Lin. et al., Fine-grained grocery product recognition by one-shot learning, in *Proceedings of the 26th ACM International Conference on Multimedia* (2019), pp. 1706–1714
8. E. Goldman, J. Goldberger, Large-scale classification of structured objects using a CRF with deep class embedding. arXiv:1705.07420 (2017)
9. K. He, X. Zhang, S. Ren, et al., Deep residual learning for image recognition, in *Proceedings of the IEEE Conference on Computer Vision and Pattern Recognition* (2016), pp. 770–778
10. R. Hadsell, S. Chopra, Y. LeCun, Dimensionality reduction by learning an invariant mapping, in *2006 IEEE Computer Society Conference on Computer Vision and Pattern Recognition* (2006), pp. 1735–1742
11. J. Hu, L. Shen, S. Albanie, G. Sun, E. Wu, Squeeze-and-excitation networks. IEEE Trans. Pattern Anal. Mach. Intell. **42**(8), 2011–2023 (2020)
12. P. Jund, N. Abdo, A. Eitel, et al., The freiburg groceries dataset. Preprint arXiv:1611.05799 (2016)
13. L. Karlinsky, J. Shtok, Y. Tzur, et al., Fine-grained recognition of thousands of object categories with single-example training, in *Proceedings of the IEEE Conference on Computer Vision and Pattern Recognition* (2017), pp. 4113–4122
14. G. Koch, R. Zemel, R. Salakhutdinov, Siamese neural networks for one-shot image recognition, ICML deep learning workshop (2015)
15. D. Kingma, J. Ba, Adam: A Method for Stochastic Optimization. Preprint arXiv:1412.6980 (2014)
16. J. Li, X. Wang, H. Su, Supermarket commodity identification using convolutional neural networks, in *2016 2nd International Conference on Cloud Computing and Internet of Things (CCIOT)* (2016), pp. 115–119
17. L. Liu, B. Zhou, Z. Zou, et al., A smart unstaffed retail shop based on artificial intelligence and IoT, in *2018 IEEE 23rd International Workshop on Computer Aided Modeling and Design of Communication Links and Networks (CAMAD)* (2018), pp. 1–4
18. C.Y. Lee, S. Xie, P. Gallagher, et al., Deeply-supervised nets, in *Proc. of the 18-th International Conference on Artificial Intelligence and Statistics (AISTATS)* (San Diego, CA, USA, 2015), pp. 562–570
19. X. Li, M. He, H. Li, H. Shen, A combined loss-based multiscale fully convolutional network for high-resolution remote sensing image change detection. IEEE Geosci. Remote Sens. Lett. **19**, 1–5 (2022)
20. C.G. Melek, E.B. Sonmez, S. Albayrak, A survey of product recognition in shelf images, in *2017 International Conference on Computer Science and Engineering (UBMK)* (2017), pp. 145–150
21. M. Merler, C. Galleguillos, S. Belongie, Recognizing groceries in situ using in vitro training data, in *2007 IEEE Conference on Computer Vision and Pattern Recognition* (2007), pp. 1–8
22. K. Simonyan, A. Zisserman, Very deep convolutional networks for large-scale image recognition, in *International Conference on Learning Representations* (2015)
23. C. Szegedy, S. Ioffe, V. Vanhoucke, et al., Inception-v4, inception-resnet and the impact of residual connections on learning, in *Thirty-First AAAI Conference on Artificial Intelligence* (2017)
24. M. Shorfuzzaman, M. Hossain, MetaCOVID: a Siamese neural network framework with contrastive loss for n-shot diagnosis of COVID-19 patients. Pattern Recogn. **113**, 107700 (2021)
25. A. Tonioni, L. Di Stefano, Domain invariant hierarchical embedding for grocery products recognition. Comput. Vis. Image Understanding **182**, 81–92 (2019)
26. A. Tonioni, E. Serra, L. Di Stefano, A deep learning pipeline for product recognition on store shelves, in *2018 IEEE International Conference on Image Processing, Applications and Systems (IPAS)* (2018), pp. 25–31
27. S. Varadarajan, M.M. Srivastava, Weakly supervised object localization on grocery shelves using simple FCN and synthetic dataset, in *Proceedings of the 11th Indian Conference on Computer Vision, Graphics and Image Processing* (2018), pp. 1–7
28. O. Vinyals, C. Blundell, T. Lillicrap et al., Matching networks for one shot learning. Adv. Neural Inf. Process. Syst. **29**, 3630–3638 (2016)

29. Z. Wang, C. Peng, Y. Zhang, N. Wang, L. Luo, Fully convolutional siamese networks based change detection for optical aerial images with focal contrastive loss. Neurocomputing **457**, 155–167 (2021)
30. X.S. Wei, Q. Cui, L. Yang, et al., RPC: A large-scale retail product checkout dataset. Preprint arXiv:1901.07249 (2019)
31. S. Woo, J. Park, J.Y. Lee, I.S. Kweon, Cbam: convolutional block attention module, in *Proceedings of the European Conference on Computer Vision (ECCV)* (2018), pp. 3–19
32. H. Zhao, J. Shi, X. Qi, et al., Pyramid scene parsing network, in *Proceedings of the IEEE Conference on Computer Vision and Pattern Recognition* (2017), pp. 2881–2890

Publisher's Note Springer Nature remains neutral with regard to jurisdictional claims in published maps and institutional affiliations.